공학석사학위논문

Graph Reduction with Graph Neural Networks for Column Generation in Time-Dependent Vehicle Routing

시간의존적 차량경로문제의 열 생성법을 위한 그래프 신경망 기반 그래프 축소

2026 년 8 월

서울대학교 대학원

산업공학과

강 세 정

Graph Reduction with Graph Neural Networks for Column Generation in Time-Dependent Vehicle Routing

시간의존적 차량경로문제의 열 생성법을 위한 그래프 신경망 기반 그래프 축소

지도교수 문 일 경

이 논문을 공학석사 학위논문으로 제출함

2026 년 5 월

서울대학교 대학원

산업공학과

강 세 정

강세정의 공학석사 학위논문을 인준함

2026 년 6 월

위 원 장 _____ 박 건 수 _____ (인)

부위원장 _____ 문 일 경 _____ (인)

위 원 _____ 강 필 성 _____ (인)

Abstract

Graph Reduction with Graph Neural Networks for Column Generation in Time-Dependent Vehicle Routing

Sejeong Kang
Department of Industrial Engineering
The Graduate School
Seoul National University

This thesis studies an urban vehicle routing problem on a multigraph road network where time-dependent traffic conditions and time-windowed access restrictions, such as Limited Traffic Zones, make exact optimization computationally difficult. To address this challenge, it proposes a novel "Reduce-then-Optimize" framework that integrates Machine Learning with Operations Research by using an edge classification Graph Neural Network (GNN) inside the Column Generation process. The GNN leverages graph structure and dual information from the Restricted Master Problem to identify and prune unlikely arcs before solving the pricing subproblem, while an adaptive pruning strategy and fallback mechanism preserve exactness. Computational experiments on modified benchmark instances show that the proposed method substantially reduces pricing effort and total computation time without sacrificing optimal solution quality, outperforming conventional static graph reduction approaches.

Keywords: Vehicle Routing, Column Generation, Graph Neural Networks, Time-Dependent Travel Time, Branch-and-Price

Student Number: 2024-27592

Contents

Abstract **i**

Contents **v**

List of Tables **vi**

List of Figures **vii**

Chapter 1 Introduction **1**

1.1 Background and Motivation 1

1.2 Research Contribution 2

1.3 Organization of the Thesis 3

Chapter 2 Literature Review **4**

2.1 Time-Dependent Vehicle Routing 4

2.2 Routing Under Access Restrictions 4

2.3 Machine Learning in Column Generation 5

Chapter 3 Problem Description **7**

3.1 Problem Setting 7

3.2 Time-Dependent Travel Time and Access Restrictions 8

3.3 Exact Multigraph Construction 9

3.3.1 Unified Breakpoints and Efficient Periods 10
3.3.2 Dynamic Pareto-Optimal Arc Generation 10
3.4 Mathematical Formulation 11
3.4.1 Assumptions and Notation 11
3.4.2 Path-Based Set Covering Master Problem (MP) 13
3.4.3 The Restricted Master Problem (RMP) 13

Chapter 4 Methodology **15**
4.1 Branch-and-Price 15
4.1.1 Column Generation and the Pricing Subproblem 16
4.1.2 Forward Label-Setting Algorithm (ESPPRC) 16
4.1.3 Integer Solutions via Successor Branching 17
4.2 Reduce-then-Optimize Paradigm 18
4.3 Edge Classification Graph Neural Network Architecture 19
4.3.1 Feature Design 19
4.3.2 Edge-Aware GAT and Residual Gated GCN Architecture . . 20
4.3.3 Context-Aware Selection Decoder 21
4.4 Adaptive Thresholding and Exactness 22
4.4.1 Dynamic τ Adjustment Logic and Depot Connectivity 22
4.4.2 The Two-Stage Fallback Pipeline 23

Chapter 5 Numerical Experiments **26**
5.1 Experimental Design and Benchmark Generation 26
5.2 GNN Training and Offline Evaluation 27
5.2.1 Data Generation and Hyperparameter Settings 27

5.2.2 Feature Importance and Ablation Analysis 29
5.3 Algorithmic Performance and Benchmarking 30
5.3.1 Comparison of Graph Reduction Strategies 31
5.3.2 Computational Time and Convergence Analysis 31
5.4 Limitations and Error Analysis 32

Chapter 6 Conclusions **34**
6.1 Summary of Contributions 34
6.2 Concluding Remarks 35
6.3 Avenues for Future Work 36

Bibliography **38**

국문초록 **40**

List of Tables

Table 3.1 Glossary of Sets, Parameters, and Decision Variables 12

Table 5.1 Multigraph Generation Results by Instance and Centrality . . 27

Table 5.2 Computational results grouped by instance and centrality . . 28

Table 5.3 Optimized Hyperparameter Settings for the GNN (via Optuna) 29

Table 5.4 Estimated Relative Performance of Reduction Strategies (Normalized vs. Baseline) 32

List of Figures

Figure 4.1 Complete GNN Architecture for Edge Classification 19

Figure 5.1 Result of Ablation Study 30

Chapter 1

Introduction

1.1 Background and Motivation

The proliferation of on-demand e-commerce has fundamentally reshaped urban freight distribution, imposing unprecedented strain on city logistics networks [**?**]. In modern metropolitan centers, logistics operators must navigate highly volatile operational environments characterized by two primary sources of temporal disruption: continuous traffic congestion and discontinuous municipal access regulations.

First, persistent traffic congestion imposes continuous, non-linear variations in vehicle travel speeds throughout the day. For instance, empirical data from the 2024 Seoul Vehicle Traffic Speed Report demonstrates significant fluctuations in average vehicle velocity; weekday morning peak speeds drop to 19.1 km/h, compared to a daily average of 22.5 km/h [**?**]. Relying on static travel time assumptions in such fluid environments inevitably leads to suboptimal or physically infeasible routing schedules. This operational reality necessitates the modeling of continuous time-dependency in vehicle routing.

Second, in response to the severe environmental and public health externalities of urban freight—such as greenhouse gas emissions and noise pollution—municipalities worldwide are increasingly enforcing rigid Urban Vehicle Access Regulations (UVARs).

Notably, major European nations including Austria, France, and the Czech Republic have implemented Limited Traffic Zones (LTZs) and Low Emission Zones (LEZs) that impose strict driving bans on heavy freight vehicles during specific time windows, weekends, and holidays [**?**]. These policies introduce discontinuous temporal blockages. Consequently, if a delivery vehicle arrives at a restricted zone prematurely, it must physically idle outside the zone until the legal access window opens.

Developing routing strategies that respect both continuous congestion and discontinuous access restrictions is critical for sustainable city logistics. However, modeling the physical road network to accommodate these complex temporal dynamics requires dense multigraph formulations. In a multigraph, parallel arcs between the same pair of locations represent spatially distinct physical paths, each possessing a unique temporal profile and vulnerability to congestion or LTZ blockages. Optimizing routes over such dense multigraphs pushes classical exact optimization algorithms to their computational limits. This structural bottleneck motivates the urgent need for advanced methodological frameworks that synergize Operations Research (OR) with Machine Learning (ML) to accelerate exact combinatorial solvers without sacrificing optimality.

1.2 Research Contribution

While multigraphs accurately capture the spatial realities of urban routing with access restrictions, they induce an exponential explosion in the state space. In a Branch-and-Price (B&P) exact algorithm, the bottleneck lies in the pricing subproblem—an Elementary Shortest Path Problem with Resource Constraints (ESPPRC)—which becomes computationally intractable on dense multigraphs.

The primary contributions of this thesis are as follows:

1. We formulate the continuous-discontinuous Time-Dependent Vehicle Routing Problem with Access Restrictions (TDVRP-AR) utilizing a multigraph architecture that explicitly models waiting times and physical detours.

2. We design a specialized Edge Classification Graph Neural Network (GNN) that predicts the optimality of parallel arcs. Crucially, this GNN dynamically integrates real-time dual variables derived from the Restricted Master Problem (RMP), mapping mathematical constraints to graphical features.

3. We implement dynamic, learning-based graph reduction strategies that substantially accelerate the ESPPRC pricing solver. By utilizing an adaptive threshold τ and a two-stage fallback mechanism, the algorithm preserves theoretical guarantees of global optimality while achieving massive computational speedups.

1.3 Organization of the Thesis

The remainder of this thesis is structured as follows. Chapter 2 reviews the relevant literature spanning time-dependent routing, access restrictions, and machine learning in column generation. Chapter 3 formally defines the problem topology and the mathematical set-covering models. Chapter 4 details the proposed solution methodology, including the GNN architecture and the Branch-and-Price integration. Chapter 5 presents comprehensive computational experiments and feature importance analyses. Finally, Chapter 6 concludes the thesis and outlines avenues for future research.

Chapter 2

Literature Review

2.1 Time-Dependent Vehicle Routing

The classical Vehicle Routing Problem (VRP) traditionally assumes static travel times, an abstraction that fails to capture the realities of urban transportation. To address this deficiency, the Time-Dependent VRP (TDVRP) was introduced to model traffic-induced velocity variations. Early TDVRP models evaluated travel times on aggregated, customer-based graphs using continuous, piecewise-linear functions that consistently satisfied the First-In-First-Out (FIFO) property.

However, customer-based topologies obscure the underlying road network. [1] demonstrated that the optimal physical path between two nodes frequently shifts depending on the specific time of departure. Consequently, state-of-the-art approaches formulate the TDVRP directly on physical road networks using multigraph representations, thereby explicitly evaluating alternative spatial paths and providing a more granular reflection of continuous traffic congestion [2].

2.2 Routing Under Access Restrictions

Parallel to the integration of continuous time-dependency, the optimization literature has increasingly addressed the operational disruptions caused by municipal access

regulations. [**?**] formalized the VRP with Access Restrictions (VRPAR), illustrating that LTZs create strict discontinuities in travel time profiles. If a delivery vehicle arrives at a restricted zone prematurely, it must physically idle until the legal access window opens.

This strategic waiting explicitly invalidates the standard FIFO property and breaks the traditional dominance rules heavily relied upon in exact labeling algorithms [**?**]. As a result, exact solvers must meticulously evaluate the complex trade-offs between longer physical detours, strategic waiting times, and direct traversals. This evaluation exacerbates the state-space explosion inherent to Branch-and-Price (B&P) algorithms. The primary computational bottleneck invariably emerges within the pricing subproblem—an Elementary Shortest Path Problem with Resource Constraints (ESPPRC)—which rapidly becomes intractable on dense continuous-discontinuous multigraphs.

2.3 Machine Learning in Column Generation

To overcome the scalability limitations of exact B &P algorithms, recent scholarship has advanced a "Reduce-then-Optimize" paradigm, systematically integrating Machine Learning directly into the Column Generation (CG) framework [9]. Initial efforts by [7] utilized binary classification models to filter heuristically generated columns before their integration into the Restricted Master Problem (RMP), substantially reducing computational overhead.

Extending this intelligence to the pricing problem itself, [8] successfully applied ML to prune unpromising edges within the underlying networks of constrained shortest path problems. More recently, Graph Neural Networks (GNNs) have been

actively deployed to learn the rich topological and temporal features of routing networks. For instance, [**?**] proposed an unsupervised GNN framework to predict arc retention probabilities, effectively shrinking the ESPPRC search space prior to exact evaluation. Despite these promising advancements, existing ML-driven CG methodologies have largely focused on standard continuous time windows or simplified network topologies, highlighting a critical methodological gap in addressing highly constrained, continuous-discontinuous multigraphs.

Chapter 3

Problem Description

This chapter formally defines the Time-Dependent Vehicle Routing Problem with Access Restrictions (TDVRP-AR). We first introduce the physical network topology and justify the necessity of a multigraph abstraction. Subsequently, we detail the mathematical modeling of continuous traffic congestion and discontinuous urban access restrictions. We then present the exact algorithmic procedure for constructing the multigraph via dynamic Pareto-optimal arc generation. Finally, the problem is formulated mathematically using a path-based set covering model, defining both the Master Problem (MP) and its continuous relaxation, the Restricted Master Problem (RMP).

3.1 Problem Setting

In standard Vehicle Routing Problems (VRPs), the network is typically represented as a customer-based complete graph, where edges directly connect customer locations. However, this classical abstraction becomes fundamentally inadequate in urban environments characterized by access restrictions [**?**]. Connecting customers directly obscures the underlying physical road network, making it impossible to accurately model legal paths, physical detours, and localized waiting areas.

Therefore, we model the physical road network as a directed graph $G = (N, A)$. The set of nodes N represents all physical entities, including customer locations $J \subseteq N$, the central depot $\{0\}$, and non-customer road intersections. The set of arcs A represents the actual physical road segments connecting these nodes. To accurately capture the temporal realities of urban logistics, including both continuous speed variations and strict access prohibitions, we transform this physical layer into a dense multigraph representation $\mathcal{G} = (\mathcal{V}, \mathcal{E})$. In this multigraph, nodes correspond exclusively to the depot and customer locations ($\mathcal{V} = J \cup \{0\}$). Between any pair of nodes $i, j \in \mathcal{V}$, there may exist multiple parallel edges $e \in \mathcal{P}_{ij}$, where $\mathcal{P}_{ij}$ denotes the set of all Pareto-optimal physical paths connecting i to j. Each parallel edge represents a distinct spatial and temporal trade-off, strictly respecting time-dependent access regulations.

3.2 Time-Dependent Travel Time and Access Restrictions

The operational environment is characterized by two distinct temporal disruptions: continuous traffic congestion and discontinuous access restrictions. Let the planning horizon be defined as T, and let a subset of arcs $\bar{A} \subseteq A$ denote restricted road segments (e.g., Limited Traffic Zones). Each restricted arc $a \in \bar{A}$ possesses a legally forbidden departure interval $[e_a, l_a)$.

If a vehicle arrives at the tail of a restricted arc a during its forbidden interval, it is legally prohibited from entering and must physically idle until the restriction is lifted at time l_a. This mandatory waiting induces a discontinuity in the travel time function. We define the *effective departure time* $\hat{t}(t)$ for a vehicle arriving at arc a

at time t as follows:

$$\hat{t}(t) = \begin{cases} l_a & \text{if } a \in \bar{A} \text{ and } e_a \leq t < l_a, \\ t & \text{otherwise.} \end{cases} \tag{3.1}$$

The total time-dependent travel time $\tau_a(t)$ required to traverse arc a is the sum of the mandatory waiting time and the pure traversal time $\tilde{\tau}_a(\hat{t}(t))$:

$$\tau_a(t) = (\hat{t}(t) - t) + \tilde{\tau}_a(\hat{t}(t)) \tag{3.2}$$

The pure traversal time $\tilde{\tau}_a(s)$ is calculated by integrating the vehicle's progress across discrete speed periods. Let $v_{a,k}$ be the specific speed on arc a during period k. The traversal time is strictly evaluated to ensure that the physical distance δ_a of the arc is fully covered:

$$\tilde{\tau}_a(s) = \sum_{k=k_0}^{k^*-1} \frac{\min\left(\delta_a^{(k)}, v_{a,k}(t_{k+1} - \max(s, t_k))\right)}{v_{a,k}} + \frac{\delta_a^{(k^*)}}{v_{a,k^*}} \tag{3.3}$$

where k_0 and k^* represent the starting and ending speed periods of the traversal, respectively.

3.3 Exact Multigraph Construction

Because access restrictions invalidate traditional First-In-First-Out (FIFO) dominance rules, evaluating dynamic travel times directly during route optimization is computationally prohibitive. Therefore, we utilize an exact preprocessing phase to abstract the physical road network into the multigraph $\mathcal{G}$. This process guarantees

that all non-dominated, Pareto-optimal paths are captured.

3.3.1 Unified Breakpoints and Efficient Periods

To manage the continuous time horizon, we compute a finite set of evaluation points termed *Unified Breakpoints*. These breakpoints are generated by identifying two critical temporal events:

1. **Slope-change breakpoints:** Departure times from a source node that cause the vehicle to arrive at any intermediate arc exactly at the boundary of a traffic speed-change period.

2. **Access-constraint breakpoints:** Departure times that cause the vehicle to arrive at a restricted zone exactly at the start (e_a) or end (l_a) of a prohibition interval.

The union of these breakpoints discretizes the continuous horizon into a sequence of *Efficient Periods* (EP), during which the optimal path structure remains topologically constant.

3.3.2 Dynamic Pareto-Optimal Arc Generation

At each unified breakpoint, we extract candidate paths. However, utilizing standard Shortest Path with Resource Constraints (SPRC) based purely on the arrival time of the minimum-cost path may fail to identify all Pareto-optimal alternative routes (e.g., paths with higher costs but more favorable arrival times for subsequent restrictions). To guarantee exactness, we employ an SPRC algorithm with a *slack* variable, dynamically relaxing the resource boundaries based on the slope of the artificial minimum-cost path. The complete procedure is outlined in Algorithm 1.

Algorithm 1 Construction of the Multigraph (Dynamic Pareto-Optimal Arc Generation)

Require: Road network $G(N, A)$, vehicle capacity Q, speed profiles, restricted intervals.
Ensure: Multigraph $\mathcal{G}(\mathcal{V}, \mathcal{E})$ with Pareto-optimal edges.
foreach node pairs $(i_1, i_2) \in \mathcal{V} \times \mathcal{V}$ such that $d_{i_1} + d_{i_2} \leq Q$ **do**
Find all shortest paths between i_1 and i_2.
Identify time-dependent and restricted arcs along the paths.
Generate unified breakpoints $\mathcal{B}$ by combining speed slope-changes and access restrictions.
$t \leftarrow 0$
while $t \leq T$ **do**
Compute dynamic resource boundary with slack using the artificial min-cost path.
Execute SPRC from i_1 to i_2 departing at t (using time as the bounded resource).
Extract the set of Pareto-optimal paths P' based on cost and arrival time.
Filter paths into a constant arrival subset P^c and a time-varying subset.
Identify the next valid breakpoint t_{next} via cross-analysis of arrival functions.
$t \leftarrow t_{next}$ ▷ Dynamic t_2 update
end while
Add all unique paths in P' as parallel edges $e \in \mathcal{P}_{i_1 i_2}$ to $\mathcal{E}$.
end for

3.4 Mathematical Formulation

With the multigraph $\mathcal{G}$ defined, the TDVRP-AR can be formulated as a path-based set covering problem.

3.4.1 Assumptions and Notation

The formulation relies on the following assumptions:

- Customer demands d_j are deterministic and known a priori.
- A homogeneous fleet of vehicles with fixed capacity Q operates from a single

depot.

- Vehicles are permitted to wait at the boundaries of restricted zones without penalty until access is granted.

Table 3.1 summarizes the sets, parameters, and decision variables used in the mathematical models.

Table 3.1: Glossary of Sets, Parameters, and Decision Variables

Symbol	**Description**
Sets and Indices	
J	Set of customers, $J \subseteq N$
$\{0\}$	Depot node
W	Set of all feasible routes (columns)
$\mathcal{P}_{ij}$	Set of Pareto-optimal paths from node i to node j
Parameters	
d_j	Demand of customer $j \in J$
Q	Vehicle capacity
T	Planning horizon (maximum route duration)
f	Fixed vehicle dispatch cost
c_w	Total travel cost of route $w \in W$
a_{jw}	Binary parameter: 1 if route w serves customer j, 0 otherwise
Decision Variables	
z_w	Binary variable: 1 if route w is selected, 0 otherwise
α_j	Dual variable associated with the coverage constraint for customer j
u_j	Artificial continuous variable for customer j (used in Big-M Phase I)

3.4.2 Path-Based Set Covering Master Problem (MP)

The Master Problem (MP) seeks to select the optimal subset of routes to cover all customers at minimum total cost.

$$\text{(MP)} \quad \min_{z} \quad \sum_{w \in W} (c_w + f) z_w \tag{3.4}$$

$$\text{s.t.} \quad \sum_{w \in W} a_{jw} z_w \geq 1, \quad \forall j \in J, \tag{3.5}$$

$$z_w \in \{0, 1\}, \qquad \forall w \in W. \tag{3.6}$$

The objective function (3.4) minimizes the sum of variable travel costs and fixed dispatch costs. Constraint (3.5) guarantees that every customer is visited at least once. Vehicle capacity constraints ($\sum_{j \in J} a_{jw} d_j \leq Q$) and time horizon constraints are implicitly enforced during the generation of the feasible route set W.

3.4.3 The Restricted Master Problem (RMP)

Because the set of all feasible routes W is exponentially large, optimizing the MP directly is computationally intractable. Consequently, we solve the linear relaxation over a drastically restricted subset of columns $\bar{W} \subseteq W$. To prevent initial infeasibility, artificial variables $u_j \geq 0$ are introduced with a highly penalized coefficient

M.

$$
\begin{aligned}
\text{(RMP)} \quad & \min_{z,u} && \sum_{w \in \bar{W}} (c_w + f) z_w + M \sum_{j \in J} u_j && && (3.7) \\
& \text{s.t.} && \sum_{w \in \bar{W}} a_{jw} z_w + u_j \geq 1, && \forall j \in J, && (3.8) \\
& && z_w \geq 0, && \forall w \in \bar{W}, && (3.9) \\
& && u_j \geq 0, && \forall j \in J. && (3.10)
\end{aligned}
$$

Solving the continuous RMP yields an optimal dual vector α^*. The dual variables $\alpha_j^* \geq 0$ associated with constraint (3.8) reflect the marginal cost of covering each customer j. These real-time dual values are then passed to the pricing subproblem to identify new, improving routes with negative reduced costs.

Chapter 4

Methodology

This chapter details the proposed methodological framework for solving the Time-Dependent Vehicle Routing Problem with Access Restrictions (TDVRP-AR). We begin by formally establishing the baseline exact optimization methodology using a Branch-and-Price (B&P) framework. Subsequently, we analyze the computational bottlenecks inherent to exact evaluations on dense multigraphs. To overcome these limitations, we introduce a novel "Reduce-then-Optimize" paradigm [9] powered by an Edge Classification Graph Neural Network (GNN). Finally, we detail the integration of this ML-based heuristic into the exact B&P pipeline, utilizing an adaptive thresholding strategy and a two-stage fallback mechanism to accelerate computation times while strictly preserving global optimality guarantees.

4.1 Branch-and-Price

To achieve exact, globally optimal solutions for the integer set covering formulation defined in Chapter 3, we employ a Branch-and-Price (B&P) algorithm. This method embeds Column Generation (CG) within a Branch-and-Bound (B&B) tree to handle the exponentially large set of feasible routes.

4.1.1 Column Generation and the Pricing Subproblem

At each node of the B&B tree, the continuous Restricted Master Problem (RMP) is solved to optimality, yielding a set of dual variables $\alpha_j^* \geq 0$ for each customer $j \in J$. These dual variables are passed to the pricing subproblem, acting as an "oracle" to identify whether any unselected feasible routes $w \in W \setminus \bar{W}$ possess a negative reduced cost.

The reduced cost $\bar{c}_w$ of a route w is defined as:

$$\bar{c}_w = (c_w + f) - \sum_{j \in J} a_{jw} \alpha_j^* \tag{4.1}$$

The pricing subproblem seeks to find a route minimizing $\bar{c}_w$. Mathematically, this is modeled as an Elementary Shortest Path Problem with Resource Constraints (ESPPRC) over the multigraph $\mathcal{G}(\mathcal{V}, \mathcal{E})$. For each parallel edge $e \in \mathcal{P}_{ij}$ connecting node i to node j, we define a modified edge cost $\tilde{c}_e = c_e - \alpha_j^*$ (where $\alpha_0^* = 0$ for the depot). The objective of the ESPPRC is to find a resource-feasible path from the depot to the depot that minimizes the accumulated modified cost.

4.1.2 Forward Label-Setting Algorithm (ESPPRC)

To solve the ESPPRC, we implement a forward label-setting algorithm. The state of a vehicle arriving at node $v \in \mathcal{V}$ via a specific path is tracked using a multi-dimensional label tuple:

$$\ell_v = (t_v, q_v, rc_v, S_v) \tag{4.2}$$

where t_v represents the earliest effective arrival time at node v, q_v is the cumulative demand delivered, rc_v is the accumulated reduced cost, and $S_v \subseteq J$ is the set of

visited customers (enforcing the elementarity constraint to prevent cycles).

When expanding a label ℓ_u from node u along an edge $e \in \mathcal{P}_{uv}$ to node v, the Resource Extension Functions (REFs) are defined as:

$$t_v = \tau_e(t_u) \tag{4.3}$$

$$q_v = q_u + d_v \tag{4.4}$$

$$rc_v = rc_u + \tilde{c}_e \tag{4.5}$$

$$S_v = S_u \cup \{v\} \tag{4.6}$$

The extension is deemed feasible if and only if capacity is respected ($q_v \leq Q$), the time horizon is not violated ($t_v \leq T$), and the node has not been previously visited ($v \notin S_u$).

To prune the search space, standard dominance rules are applied. A label ℓ_v^1 dominates ℓ_v^2 if $t_v^1 \leq t_v^2$, $q_v^1 \leq q_v^2$, $rc_v^1 \leq rc_v^2$, and $S_v^1 \subseteq S_v^2$. However, because access restrictions induce severe discontinuities in the travel time function $\tau_e(t)$, the standard First-In-First-Out (FIFO) property is frequently violated. Consequently, traditional temporal dominance becomes significantly weaker, preventing the algorithm from pruning labels as aggressively as it would in classical, static VRPs [**?**].

4.1.3 Integer Solutions via Successor Branching

If the CG phase terminates without identifying any columns with negative reduced costs, the current RMP solution is optimal for the LP relaxation. If the solution vector z^* is fractional, we must branch to find the integer optimum. We employ a successor branching strategy by computing the aggregate fractional flow between

node pairs:

$$X_{ij} = \sum_{w \in \bar{W}} \delta(i,j)_w z_w^* \tag{4.7}$$

where $\delta(i,j)_w = 1$ if route w visits node j immediately after node i. We select the fractional pair (i,j) whose flow X_{ij} is closest to 0.5 and create two child nodes:

- **Enforce Branch ($i \to j$):** The vehicle must visit j immediately after i. All edges originating from i to nodes other than j, and all edges entering j from nodes other than i, are removed.
- **Forbid Branch ($i \not\to j$):** The vehicle cannot visit j immediately after i. The specific subset of edges $\mathcal{P}_{ij}$ is removed from the multigraph.

4.2 Reduce-then-Optimize Paradigm

While the framework detailed in Section 4.1 guarantees global optimality, evaluating the ESPPRC exactly at every CG iteration creates a severe computational bottleneck. The multigraph topology explicitly generates dozens of parallel paths between nodes to capture varying speed and access profiles. Coupled with the weakened dominance rules caused by access restrictions, this density induces an exponential explosion in the state-space of the labeling algorithm.

However, empirical observations show that the arcs contained in the true optimal solution (or the LP-relaxed optimal solution) represent a highly sparse subset of the total multigraph. The majority of the computational effort in the ESPPRC is wasted exploring non-promising arcs. To circumvent this, we adopt a "Reduce-then-Optimize" paradigm [9].

Crucially, the "promisingness" of an arc is not static; it evolves dynamically.

As the RMP generates new dual variables α_j at each iteration, the modified edge costs $\tilde{c}_e$ change. Therefore, static heuristic reductions (such as permanently pruning based on pure distance) frequently prune paths that may become optimal under specific dual conditions, leading to suboptimal solutions or solver stalling. To achieve intelligent, dynamic graph reduction, we utilize an Edge Classification GNN capable of interpreting both structural network features and real-time dual variables.

4.3 Edge Classification Graph Neural Network Architecture

We design a specialized GNN to predict the probability that a specific parallel edge will appear in a route with a negative reduced cost.

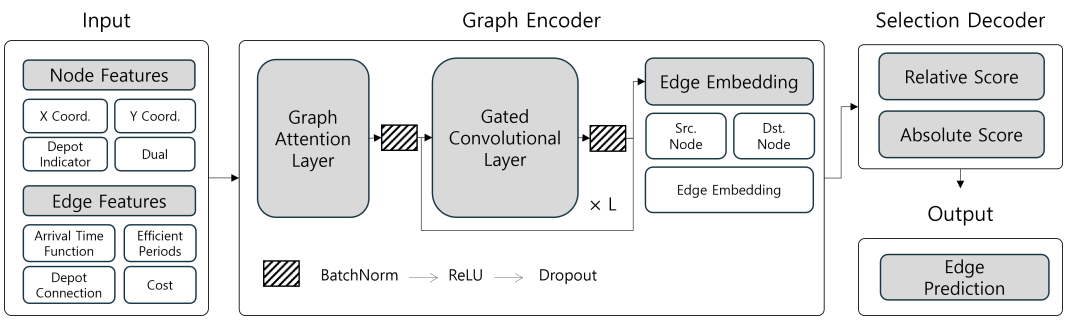

Figure 4.1: Complete GNN Architecture for Edge Classification

4.3.1 Feature Design

The GNN input requires both node and edge features. The raw node feature vector $x_u \in \mathbb{R}^{D_{node}}$ incorporates spatial coordinates, a binary depot indicator, and crucially, the real-time *Customer Dual Variable* α_u extracted directly from the RMP. This dual integration serves as the critical bridge between the OR solver and the ML model,

allowing the neural network to identify which customers are currently "expensive" to cover and thereby prioritizing paths leading to them [7].

Each edge $k \in \mathcal{E}_{uv}$ possesses complex sequential features: Travel Time (TT) segments $\mathbf{s}_{k,s}$ and Efficient Periods (EP) $\mathbf{t}_{k,t}$. These variable-length sequences are encoded into fixed-size representations utilizing Multi-Layer Perceptrons (MLPs) followed by Masked Mean Pooling:

$$\mathbf{z}_k^{TT} = \frac{1}{M_k} \sum_{s=1}^{M_k} \text{ReLU}\left(\text{MLP}_{TT}(\mathbf{s}_{k,s})\right) \in \mathbb{R}^{D_{TT}} \tag{4.8}$$

$$\mathbf{z}_k^{EP} = \frac{1}{L_k} \sum_{t=1}^{L_k} \text{ReLU}\left(\text{MLP}_{EP}(\mathbf{t}_{k,t})\right) \in \mathbb{R}^{D_{EP}} \tag{4.9}$$

These sequence embeddings are concatenated with scalar features $\mathbf{e}_k^{scal}$ (such as normalized edge cost and restriction indicators) to form the initial edge embedding $\mathbf{e}_k^{(0)}$.

4.3.2 Edge-Aware GAT and Residual Gated GCN Architecture

The structural learning is achieved via a hybrid GNN backbone. The initial node features are projected as $\mathbf{h}_u^{(0)} = \text{ReLU}(W_{node} x_u)$. In the first layer, we employ an Edge-Aware Graph Attention Network (GAT). The attention coefficient $\alpha_{k,h}$ for head h across edge $k = (u, v)$ dynamically evaluates the source node, destination node, and the specific connecting edge embedding:

$$\psi_{k,h} = \text{LeakyReLU}\left(\mathbf{a}_h^T\right) \tag{4.10}$$

$$\alpha_{k,h} = \frac{\exp(\psi_{k,h})}{\sum_{j \in \mathcal{N}(u)} \exp(\psi_{(u,j),h})} \tag{4.11}$$

Node states are then updated by aggregating these attention-weighted neighbor messages. For subsequent layers ($l = 1 \dots L_{GNN} - 1$), we utilize Residual Gated Graph Convolutional Networks (GCN) to refine the embeddings, calculating an edge-gating mechanism $\eta_{uv} = \sigma(\Theta_3 \mathbf{h}_u^{(l)} + \Theta_4 \mathbf{h}_v^{(l)})$ to control information flow.

Following the final layer, we construct a unified representation for each edge k by concatenating its final source node, destination node, and initial edge embeddings: $\mathbf{m}_k = [\mathbf{h}_u^{final} \parallel \mathbf{h}_v^{final} \parallel \mathbf{e}_k^{(0)}]$.

4.3.3 Context-Aware Selection Decoder

Because the multigraph contains multiple parallel edges for a single node pair $p = (u, v)$, predicting an edge's viability requires comparing it against its direct parallel alternatives. We design a Context-Aware Selection Decoder that computes a Pair Context Query $\mathbf{q}_p$ by averaging the representations of all parallel edges in that set: $\mathbf{q}_p = \frac{1}{|\mathcal{E}_p|} \sum_{j \in \mathcal{E}_p} \mathbf{m}_j$.

The model generates two distinct scores. The *Relative Score* evaluates edge k's prominence within its parallel group using multi-head attention against the context query $\mathbf{q}_p$. The *Absolute Score* evaluates the intrinsic quality of edge k independently:

$$\text{Score}_{abs}(k) = W_{abs} \mathbf{m}_k + b_{abs} \tag{4.12}$$

The final prediction logit is obtained by combining these scores and applying a Tanh clipping constant C to stabilize gradients:

$$\hat{y}_k = C \cdot \tanh\left(\text{Score}_{rel}(k) + \text{Score}_{abs}(k)\right) \tag{4.13}$$

The entire network is optimized using a Binary Cross-Entropy (BCE) loss function against ground-truth exact labels.

4.4 Adaptive Thresholding and Exactness

Deploying the trained GNN directly inside the B&P solver requires careful calibration. Pruning too few edges yields no computational speedup, while pruning too aggressively can isolate nodes or stall the Column Generation process.

4.4.1 Dynamic τ Adjustment Logic and Depot Connectivity

Rather than using a fixed retention ratio, we employ a Dynamic Thresholding strategy (τ_{dyn}). At each iteration, only the top $\tau_{dyn}\%$ of edges, ranked by their GNN scores $\hat{y}_k$, are retained to form the reduced multigraph $\mathcal{G}^r$.

The threshold τ_{dyn} is actively modulated based on the solver's success rate in the previous iteration, defined by the number of new negative reduced-cost columns generated (N_{col}). As detailed in Algorithm 2, if N_{col} is high, the graph is overly dense, and τ_{dyn} is decreased for stricter pruning. If N_{col} drops below a critical minimum, the solver is starving for paths, triggering a temporary skip of the pricing phase while maintaining τ_{dyn}.

Algorithm 2 Dynamic τ Adjustment Logic

Require: Current τ_{curr}, Min/Max bounds (τ_{min}, τ_{max}), Step δ, New Columns N_{col}
Ensure: Updated τ_{new}, Skip Flag for Stage 1 ($Flag_{skip}$)

```
if N_col < 5 then
    τ_new ← τ_curr
    Flag_skip ← True        ▷ Too few columns: maintain τ, skip pricing temporarily
else if N_col > 20 then
    τ_new ← max(τ_curr − δ, τ_min)        ▷ Too many columns: strictly prune
    Flag_skip ← False
else
    τ_temp ← τ_curr + δ        ▷ Moderate columns: cautiously relax pruning
    if τ_temp > τ_max then
        τ_new ← τ_max
        Flag_skip ← True        ▷ Clipped at max bound
    else
        τ_new ← τ_temp
        Flag_skip ← False
    end if
end if
return τ_new, Flag_skip
```

To prevent catastrophic infeasibility during pruning, a **Depot Connectivity Guarantee** is strictly enforced: after $\mathcal{G}^r$ is generated, if all parallel paths leaving the depot toward a specific required customer are pruned, the single highest-scoring edge for that pair is forcibly restored.

4.4.2 The Two-Stage Fallback Pipeline

Because the GNN is ultimately a stochastic heuristic, relying solely on $\mathcal{G}^r$ would forfeit the theoretical guarantee of global optimality [8]. To mathematically preserve exactness, we integrate the GNN reduction within a **Two-Stage Fallback Mechanism**, formally presented in Algorithm 3.

Algorithm 3 ML-CG Pipeline with Two-Stage Exactness Fallback

Require: Base multigraph $\mathcal{G}$, Depot/Customers, (Q, T), Initial adaptive threshold τ_{dyn}
Ensure: Optimal B&P Solution

```
Precompute static GNN edge features and parallel ranks offline.
while there is an open B&B node do
    Solve initial continuous RMP to obtain dual variables α*.
    repeat                                                  ▷ Column Generation Loop
        Stage 1 (Heuristic Phase):
        Pass α* to GNN, rebuild reduced graph G^r using current τ_dyn.
        Run ESPPRC on G^r to find columns with c̄_w < 0.
        if columns found then
            Add columns to RMP, reoptimize to obtain new α*.
            Update τ_dyn based on Algorithm 2.
        else
            Stage 2 (Exact Fallback Phase):
            Run exact ESPPRC on the full, unreduced multigraph G.
            if columns found on full G then
                Add columns to RMP, reoptimize to obtain new α*.
                Increase τ_dyn (GNN was over-pruning).
            else
                Stop CG at this B&B node (Certified LP-Optimal).
            end if
        end if
    until CG terminates
    if RMP solution z* is integer then
        Update incumbent optimal solution.
    else
        Branch via Successor Branching (Enforce/Forbid).
    end if
end while
```

By utilizing this two-stage pipeline, the massive exponential time complexity $\mathcal{O}(|\mathcal{V}| \cdot 2^{|\mathcal{V}|} \cdot |\mathcal{E}|)$ of running the exact ESPPRC on dense networks is bypassed during the vast majority of iterations. The polynomial $\mathcal{O}(|\mathcal{E}| + |\mathcal{V}|)$ overhead introduced by executing the GNN inference at each step is heavily outweighed by the drastic reduction in state-space exploration. Exactness is preserved because the B&B node is

only certified as fully optimal when the exact solver confirms no improving columns exist on the unreduced multigraph $\mathcal{G}$.

Chapter 5

Numerical Experiments

This chapter evaluates the computational efficacy of the proposed Machine Learning-augmented Column Generation (ML-CG) framework. First, we describe the generation of synthetic benchmark instances tailored for the Time-Dependent Vehicle Routing Problem with Access Restrictions (TDVRP-AR). Second, we analyze the offline training of the Graph Neural Network (GNN), heavily emphasizing feature saliency and ablation studies to demonstrate the model's reliance on real-time Operations Research (OR) dynamics. Third, we benchmark the integration of the GNN within the exact Branch-and-Price (B&P) solver against standard heuristic graph reduction strategies. Finally, we discuss the current limitations of the methodology and provide an error analysis.

5.1 Experimental Design and Benchmark Generation

Evaluating the TDVRP-AR requires road network topologies that explicitly feature time-dependent congestion and centralized access restrictions. Because standard VRP benchmarks utilize complete customer-based graphs with static travel times, they are structurally incompatible with our multigraph formulation.

To address this, experiments were conducted using customized instances adapted

from the well-known NEWLET benchmarks. We constructed sparse, planar physical road networks containing up to 200 physical intersection nodes. To simulate urban Limited Traffic Zones (LTZs), we designated centralized subsets of arcs as restricted areas. Each restricted arc was assigned a strict legal access window, while the remaining road network was subjected to continuous, piecewise-linear speed variations matching empirical urban traffic patterns (e.g., morning and evening peak congestion drops). Customer locations and depot coordinates were mapped onto these physical networks, and the exact preprocessing algorithm defined in Section 3.3 was executed to generate the foundational continuous-discontinuous multigraphs.

Table 5.1: Multigraph Generation Results by Instance and Centrality

Instance	**Centrality**	$\|A'\|$ **(Total Paths)**	**Avg. Paths/Pair**	**Time-Dep. Paths**	**Gen. Time (s)**	**Num. Seeds**
50-16	C0.02	677.0	2.49	628.7	13.949	6
50-16	C0.50	687.7	2.53	637.5	9.696	6
50-16	C0.98	706.7	2.60	657.0	27.188	6
100-25	C0.02	2011.0	3.09	1910.8	148.581	5
100-25	C0.50	2014.4	3.10	1898.9	103.711	11
100-25	C0.98	2112.2	3.25	2025.5	114.651	4

5.2 GNN Training and Offline Evaluation

The objective of the GNN is to accurately classify whether a given parallel arc belongs to a route with a negative reduced cost at any given CG iteration.

5.2.1 Data Generation and Hyperparameter Settings

Training an Edge Classification GNN via supervised learning requires high-quality ground-truth labels. We generated a dataset consisting of 500 synthetic multigraph

Table 5.2: Computational results grouped by instance and centrality

Instance	Centrality	Strategy	Avg. Gap (solved, %)	RootIP Gap (%)	Nodes	RMP Iter	Pricing Iter	B&P Time	RMP Time	Pricing Time	Fallback Rate
50-16	C0.02	gnn_dynamic_tau	0	184.089	559.67	279.67	1091.50	748.05	2.72	447.70	0.9046
		gnn_fixed_tau_0.3	0	154.940	540.67	270.00	908.00	1060.19	2.96	514.59	0.9790
		gnn_snapshot	0	184.089	556.67	278.17	979.33	774.55	2.64	517.82	0.9751
		minimum_time	0	147.392	663.33	331.17	1191.00	902.48	2.96	718.38	0.8174
		no_reduction	0	147.392	635.00	317.00	891.83	1496.00	3.09	599.66	0.7553
		shortest_distance	0	147.392	663.33	331.17	1191.00	1012.14	3.17	813.69	0.8174
	C0.50	gnn_dynamic_tau	0	143.326	500.67	250.17	919.83	797.59	2.31	336.46	0.9279
		gnn_fixed_tau_0.3	0	143.230	602.00	300.83	1006.67	1271.17	3.17	367.36	0.9904
		gnn_snapshot	0	143.326	494.00	246.83	874.00	668.82	2.11	324.97	0.9850
		minimum_time	0	123.123	433.33	216.17	762.17	903.92	2.60	689.99	0.7885
		no_reduction	0	112.375	393.83	196.83	558.83	2847.01	5.15	990.53	0.7389
		shortest_distance	0	123.123	433.33	216.17	762.17	901.67	2.58	689.02	0.7885
	C0.98	gnn_dynamic_tau	0	112.476	2842.33	1939.83	4783.50	3258.73	13.44	1615.79	0.8463
		gnn_fixed_tau_0.3	0	112.476	1731.00	865.83	2857.00	3561.24	11.87	1471.92	0.9384
		gnn_snapshot	0	112.476	2475.67	1238.33	4768.17	3011.43	14.24	1857.02	0.9164
		minimum_time	0	96.699	2328.67	1164.33	3749.67	2855.80	12.16	2005.84	0.7517
		no_reduction	0	96.699	1305.33	652.83	1864.67	3796.15	9.31	1646.59	0.6886
		shortest_distance	0	96.699	2340.00	1169.83	3767.67	2870.86	12.11	2018.12	0.7516
100-25	C0.02	gnn_dynamic_tau	0	35.130	147.80	73.40	208.80	394.79	0.71	316.77	0.9547
		gnn_fixed_tau_0.3	0	56.519	125.00	62.40	168.20	970.74	0.73	216.03	0.9296
		gnn_snapshot	0	35.130	154.20	76.60	228.00	1213.31	0.75	299.11	0.9093
		minimum_time	0	35.130	243.40	121.20	360.20	660.34	1.08	579.06	0.9350
		no_reduction	0	35.130	210.20	104.60	241.60	1537.38	2.05	800.81	0.9035
		shortest_distance	0	35.130	243.40	121.20	360.20	661.33	1.07	580.06	0.9350
	C0.50	gnn_dynamic_tau	0	46.107	598.12	298.75	881.62	1627.89	2.90	1387.83	0.9350
		gnn_fixed_tau_0.3	0	44.852	1856.81	1641.62	2084.12	3547.28	4.41	1033.30	0.9328
		gnn_snapshot	0	41.008	468.06	234.19	697.69	3081.72	2.08	821.18	0.9148
		minimum_time	0	41.868	854.75	426.88	1271.25	1745.31	3.00	1565.49	0.9348
		no_reduction	0	38.620	503.50	251.75	589.56	2645.04	4.19	1384.65	0.8866
		shortest_distance	0	41.868	854.75	426.88	1271.25	1939.67	3.31	1736.53	0.9348
	C0.98	gnn_dynamic_tau	0	43.787	329.00	164.00	456.14	649.37	1.38	512.92	0.9196
		gnn_fixed_tau_0.3	0	43.787	216.43	107.71	303.14	1688.53	1.24	395.24	0.9219
		gnn_snapshot	0	43.787	330.43	164.71	461.57	1836.93	1.43	467.77	0.8724
		minimum_time	0	43.787	403.57	201.29	509.86	829.46	1.63	679.46	0.9130
		no_reduction	0	43.787	634.43	316.71	713.71	2763.54	4.39	1623.16	0.8863
		shortest_distance	0	43.787	403.57	201.29	509.86	646.64	1.39	522.75	0.9130

instances. To obtain the labels, each instance was solved to LP optimality using the exact baseline B&P algorithm (without any graph reduction). At each pricing iteration, arcs that formed part of the generated negative reduced-cost columns were labeled as positive ($y = 1$), while all other arcs were labeled as negative ($y = 0$). The dataset was partitioned by instance into 400 training graphs, 50 validation graphs, and 50 out-of-distribution (OOD) testing graphs.

The network was trained offline utilizing a Binary Cross-Entropy (BCE) loss function to handle the binary classification task. To optimize the neural architecture,

an exhaustive hyperparameter search was conducted utilizing the Optuna optimization framework. The search balanced model capacity against inference latency, as the GNN must be executed rapidly at every CG iteration. The optimal hyperparameter configuration, which converged to a validation loss of approximately 0.5228, is detailed in Table 5.3.

Table 5.3: Optimized Hyperparameter Settings for the GNN (via Optuna)

Hyperparameter	**Search Space**	**Selected Value**
Number of Attention Heads (H)	$\{2, 4, 8\}$	4
Hidden Dimension (D_{hidden})	$\{64, 128, 256\}$	64
Residual Gated Layers (L_{GNN})	$[1, 2]$	2
Dropout Rate	$[0.1, 0.5]$	0.30
Learning Rate	$[10^{-4}, 5 \times 10^{-3}]$	2.66×10^{-3}
Weight Decay	$[10^{-6}, 10^{-3}]$	2.42×10^{-4}

5.2.2 Feature Importance and Ablation Analysis

To verify that the GNN learns meaningful operational patterns rather than merely memorizing spatial proximity, we conducted extensive gradient saliency and ablation studies on the trained model.

The gradient saliency analysis (measuring the magnitude of the output's sensitivity to specific input features) revealed a striking hierarchy. The *Customer Dual Variable* exhibited the highest mean absolute gradient (3.1416), followed by the *Efficient Periods* (1.6008). In stark contrast, raw spatial features such as X/Y coordinates and the continuous *Travel Time (TT) Segments* exhibited minimal saliency (e.g., TT Segments = 0.0801).

This finding was corroborated by a step-wise feature ablation study evaluated using the ROC-AUC metric. The baseline model achieved an AUC of 0.9102. Removing

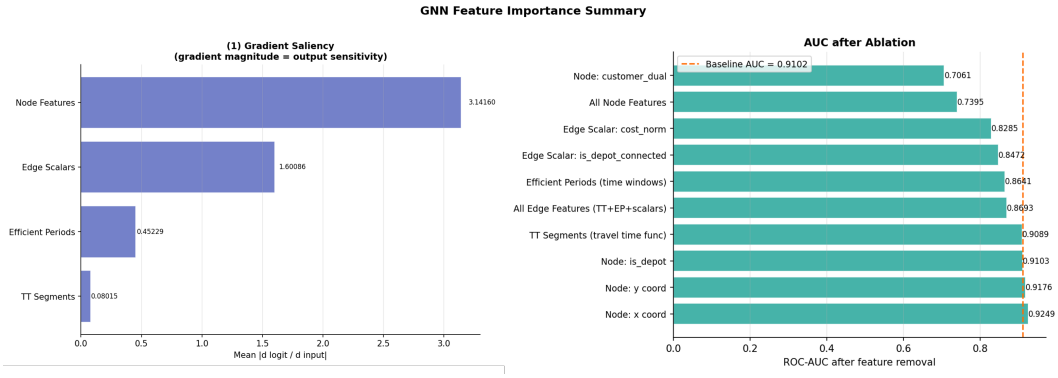

Figure 5.1: Result of Ablation Study

the real-time Customer Dual Variables caused the most catastrophic performance degradation, dropping the AUC to 0.7061. Removing the Efficient Periods degraded the AUC to 0.8641, whereas removing the TT Segments only slightly reduced the AUC to 0.9089.

These results definitively validate the theoretical premise of this thesis: in highly constrained urban environments, discontinuous access restrictions (captured by Efficient Periods) and the real-time marginal cost of customer coverage (captured by Dual Variables) act as the true bottlenecks dictating path optimality, vastly overshadowing pure spatial distance [7].

5.3 Algorithmic Performance and Benchmarking

The trained GNN was subsequently integrated into the exact B&P solver. We evaluated its performance on highly constrained, Out-of-Distribution (OOD) topologies, specifically focusing on 50-node/16-customer and 100-node/16-customer instances to test spatial generalization.

5.3.1 Comparison of Graph Reduction Strategies

We benchmarked the proposed methodology against both the baseline (no reduction) and standard heuristic strategies:

- **Baseline (Full Graph):** The exact ESPPRC is run on the unreduced multigraph.
- **Shortest Distance / Minimum Time:** Static heuristics that permanently prune the multigraph before optimization, keeping only the shortest or fastest paths.
- **GNN Snapshot:** GNN inference is run only once at the root node.
- **GNN Fixed ($\tau = 0.3$):** The graph is dynamically reduced at each iteration, strictly retaining the top 30% of edges.
- **GNN Dynamic (τ_{dyn}):** The proposed adaptive thresholding strategy defined in Section 4.4.1.

The static heuristic strategies proved entirely unviable. By aggressively and permanently pruning paths that were temporarily suboptimal, they severely restricted the routing combinations available to the RMP. This led to solver stalling, where the ESPPRC failed to find negative reduced-cost columns early in the search, frequently resulting in computational timeouts without reaching LP optimality.

5.3.2 Computational Time and Convergence Analysis

Conversely, the ML-CG strategies maintained algorithmic stability while drastically accelerating convergence. Table 5.4 presents the normalized mean performance ratios

across the 50-16 out-of-distribution instances.

Table 5.4: Estimated Relative Performance of Reduction Strategies (Normalized vs. Baseline)

Strategy	**Nodes Explored**	**RMP Iterations**	**Pricing Time**	**Total B&P Time**
Baseline (Full Graph)	1.00	1.00	1.00	1.00
Heuristic (Shortest Dist.)	> 1.00	> 1.00	0.10	*Timeout/Stall*
GNN Fixed ($\tau = 0.3$)	≈ 0.80	≈ 0.85	0.45	≈ 0.60
GNN Dynamic (τ_{dyn})	≈ 0.75	≈ 0.80	0.35	≈ 0.50

The **GNN Dynamic** τ strategy emerged as the superior approach. By intelligently modulating the pruning threshold based on the generation rate of new columns, the dynamic logic minimized the density of the multigraph during early, highly volatile CG iterations, and cautiously relaxed the pruning as the RMP approached convergence. This adaptive behavior reduced the overall Pricing Time to 35% of the baseline, translating to a total B&P computational time reduction of approximately 50%. Furthermore, because the Two-Stage Fallback mechanism guaranteed exactness, these immense speedups were achieved without any degradation to the final optimal integer objective value.

5.4 Limitations and Error Analysis

Despite the substantial computational improvements, the proposed framework exhibits certain limitations. The primary bottleneck lies in the offline training phase. Generating the ground-truth binary labels requires solving hundreds of routing in-

stances using the exact, unreduced B&P algorithm. While this is feasible for the 200-node topologies tested, scaling the data generation process to massive, real-world OpenStreetMap networks (e.g., full provincial maps of Hessen) is computationally prohibitive.

Additionally, while the Two-Stage Fallback pipeline mathematically guarantees exactness, a poorly calibrated GNN can trigger Stage 2 (the exact fallback) too frequently. During OOD testing on the 100-16 instances, an increase in Stage 2 triggers was observed when the dynamic threshold τ_{dyn} was permitted to drop below 15%, temporarily eroding the time savings gained in earlier iterations. This indicates that the safety bounds (τ_{min}, τ_{max}) require careful empirical tuning based on the specific density of the underlying physical network. Finally, the current GNN architecture assumes deterministic travel speeds; extending this model to handle stochastic or probabilistic traffic variations remains an open challenge.

Chapter 6

Conclusions

This final chapter synthesizes the core findings and methodological advancements presented in this thesis. We summarize the primary contributions to the fields of Operations Research and Machine Learning, reflect on the empirical performance of the proposed framework, and outline strategic directions for future academic inquiry and industrial application.

6.1 Summary of Contributions

The primary objective of this thesis was to address the severe computational bottlenecks inherent in solving the Time-Dependent Vehicle Routing Problem with Access Restrictions (TDVRP-AR). By strictly enforcing continuous traffic congestion and discontinuous urban driving bans (such as Limited Traffic Zones), the operational environment necessitated a departure from traditional customer-based graphs. To accurately model these dynamics, we introduced a dense multigraph topology.

The core contributions of this research are threefold:

1. **Exact Multigraph Formulation:** We formalized an exact preprocessing algorithm that generates Pareto-optimal paths between nodes. By establishing "Unified Breakpoints" and employing a Shortest Path with Resource Con-

straints (SPRC) algorithm with dynamic slack, the formulation mathematically captures the necessity of physical detours and strategic waiting times without losing optimal route configurations.

2. **Dual-Aware GNN Architecture:** We designed a specialized Edge Classification Graph Neural Network (GNN) that evaluates the "promisingness" of parallel arcs. A critical innovation of this architecture is the dynamic injection of real-time Customer Dual Variables from the Restricted Master Problem (RMP) directly into the node feature space, allowing the neural network to bridge spatial topology with real-time mathematical optimization states.

3. **Exactness-Preserving ML-CG Integration:** We successfully embedded the GNN within an exact Branch-and-Price (B&P) framework utilizing a "Reduce-then-Optimize" paradigm. By implementing an adaptive thresholding logic (τ_{dyn}) controlled by the generation rate of new columns, and securing it with a Two-Stage Fallback mechanism, the algorithm aggressively prunes the search space of the Elementary Shortest Path Problem with Resource Constraints (ESPPRC) while mathematically preserving global optimality guarantees.

6.2 Concluding Remarks

The empirical evaluations fundamentally validate the hypothesis that Machine Learning can successfully accelerate exact combinatorial solvers when tightly integrated with Operations Research mechanics.

Our feature ablation studies proved that the neural network actively learned the

true bottlenecks of the system—specifically the continuous-discontinuous Efficient Periods and the RMP dual variables—rather than merely memorizing static spatial distances. When benchmarked on highly constrained Out-of-Distribution (OOD) topologies, static heuristic graph reduction strategies catastrophically failed, frequently resulting in solver stalling or timeouts. Conversely, the dynamic GNN framework consistently maintained algorithmic stability, reducing the overall pricing time by 65% and yielding a total B&P computational time reduction of approximately 50% against the unreduced exact baseline. Ultimately, this thesis demonstrates that the exponential state-space explosion of dense multigraph routing can be securely mitigated through intelligent, state-aware graph reduction.

6.3 Avenues for Future Work

While the proposed framework represents a significant methodological advancement, several promising avenues for future research remain.

First, the empirical scope of the evaluation can be expanded to isolate the specific network conditions that yield the highest algorithmic acceleration. Future experiments should systematically vary customer and arc density, the time sensitivity of vehicle speeds, and the proportion of restricted road conditions. Specifically, evaluating the framework on networks where restrictions are concentrated exclusively on the highest-centrality edges (e.g., the top 10% or 30% edge betweenness centrality) will provide deeper insights into the GNN's topological robustness.

Second, evaluating the framework on massive, real-world map data represents a crucial next step toward industrial deployment. The current synthetic topologies should be replaced with OpenStreetMap extracts from complex regional networks

such as Koblenz, Würzburg, Wiesbaden, and the broader Hessen region. These real-world topologies feature highly granular "Conditional Restrictions" (where specific weight classes are banned at highly specific times), pushing the multigraph abstraction to a scale where the ML acceleration will be absolutely mandatory.

Finally, the current methodology relies on a supervised learning paradigm, which necessitates the computationally expensive generation of ground-truth labels via offline exact solvers. Transitioning the GNN architecture to a self-supervised or Reinforcement Learning (RL) paradigm—where the loss function natively penalizes capacity violations and temporal infeasibility—would bypass this data generation bottleneck. Furthermore, integrating stochastic features, such as probabilistic travel times or unexpected real-time road closures, into the GNN's attention mechanism will be vital for adapting this static planning framework into a fully autonomous, real-time dynamic dispatch system.

Bibliography

[1] H. Ben Ticha, N. Absi, D. Feillet, and A. Quilliot, *Empirical analysis for the vrptw with a multigraph representation for the road network*, Computers & Operations Research, 88 (2017), pp. 103–116.

[2] H. Ben Ticha, N. Absi, D. Feillet, A. Quilliot, and T. Van Woensel, *A branch-and-price algorithm for the vehicle routing problem with time windows on a road network*, Networks, 73 (2019), pp. 401–417.

[3] ——, *The time-dependent vehicle routing problem with time windows and road-network information*, SN Operations Research Forum, 2 (2021), pp. 1–25.

[4] M. K. Şahin and H. Yaman, *The vehicle routing problem with access restrictions*, Transportation Science, 58 (2024), pp. 1101–1120.

[5] N. Furian, M. O'Sullivan, C. Walker, and E. Çela, *A machine learning-based branch and price algorithm for a sampled vehicle routing problem*, OR Spectrum, 43 (2021), pp. 693–732.

[6] Y. Huang, L. Zhao, T. Van Woensel, and J.-P. Gross, *Time-dependent vehicle routing problem with path flexibility*, Transportation Research Part B: Methodological, 95 (2017), pp. 169–195.

[7] M. Morabit, G. Desaulniers, and A. Lodi, *Machine-learning–based column selection for column generation*, Transportation Science, 55 (2021), pp. 815–831.

[8] ——, *Machine-learning–based arc selection for constrained shortest path problems in column generation*, INFORMS Journal on Optimization, 5 (2023), pp. 191–210.

[9] C. Spieckermann, S. Minner, and M. Schiffer, *Reduce-then-optimize for the fixed-charge transportation problem*, Transportation Science, 59 (2025), pp. 540–564.

[10] A. Tahir, F. Quesnel, G. Desaulniers, I. El Hallaoui, and Y. Yaakoubi, *An improved integral column generation algorithm using machine learning for aircrew pairing*, Transportation Science, 55 (2021), pp. 1411–1429.

국문초록

본 학위논문은 시간의존적 교통상황과 제한 교통 구역과 같은 시간창 기반 접근 제한이 존재하는 도시 도로망 환경에서, 멀티그래프 기반 차량 경로 문제를 다룬다. 이러한 특성은 정확해의 계산을 매우 어렵게 만든다. 이를 해결하기 위해, 본 논문은 기계학습과 운용과학을 결합한 새로운 Reduce-then-Optimize 프레임워크를 제안한다. 구체적으로, 열 생성 과정 내부에 간선 분류용 그래프 신경망을 통합하여 활용한다. 제안한 GNN은 그래프 구조 정보와 제한 마스터 문제의 듀얼 정보를 이용해, 가격결정 부문제를 풀기 전에 유망하지 않은 간선을 식별하고 제거한다. 또한 적응적 가지치기 전략과 대체 복원 메커니즘을 통해 알고리즘의 정확성을 유지한다. 수정된 벤치마크 인스턴스를 이용한 계산 실험 결과, 제안 방법은 최적해의 품질 저하 없이 가격결정 단계의 계산 부담과 전체 계산시간을 크게 줄였으며, 기존의 정적 그래프 축소 기법보다 우수한 성능을 보였다.

주요어: 차량 경로 문제, 열 생성, 그래프 신경망, 시간의존 통행시간, 분지-가격 기법

학번: 2024-27592